CellOptik 300R

Acetek Electrical Ltd

The CellOptik 300R is a dusk to dawn switch designed to switch on lighting systems in back or front lit signs at night. Its compact size means that it can be fitted in signs with limited space and uses long life relay contacts.

Applications

- Back lit signs
- Signal indicators
- Lighting

Features

- Compact size (see diagram below)
- Long life contacts made from Silver Oxide
- Defaults to lighting switched on
- RoHS Compliant

Specifications

	Minimum	Typical	Maximum	Unit
Control load	1	250	320	Watts
Operating voltage	150	230	270	Volts ac
Operating frequency	*****	50	*****	Hertz
Standby power	0.8	0.9	1.0	Watts
Switch On level	60	70	80	Lux
Switch Off level	100	110	120	Lux
Time delay	1	*****	10	Seconds
Operating Temperature	-25	20	+60	°C
Ingress rating (installed)	*****	65	*****	IP
Storage Temperature	-40	*****	+80	°C
Mounting tread	*****	M20	*****	mm

Out Line Dimensions

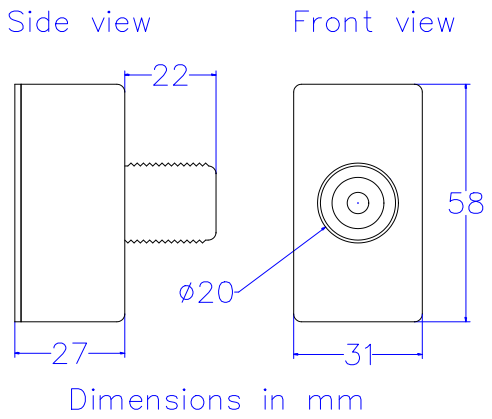

Acetek Electrical Ltd, 11 Woodside, Blackwater, Camberley, Surrey, GU17 9JJ. Tel/Fax: 01276 38657 email: acetek@freeuk.com website: www.acetek.co.uk
Company registered No 04154135. VAT No 787599245. Weee registered Company